TS-1 TYPE B BATHTUB-SHOWER COMBO

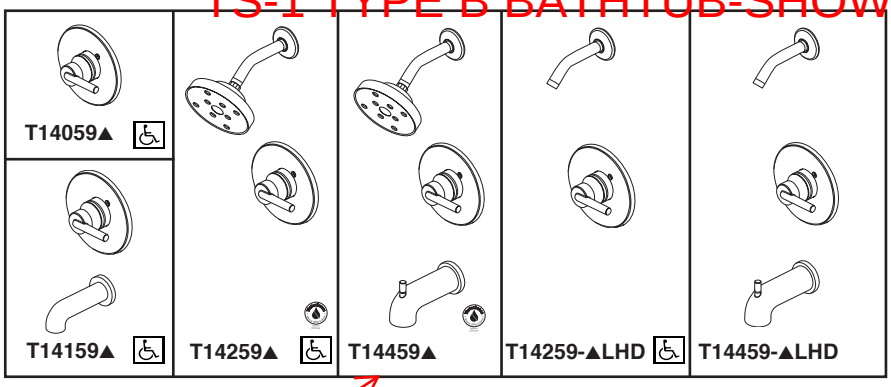


**Submitted Model No.:**_____

**Specific Features:**_____

Delta RP70175-15 showerhead 1.5gpm will be provided.

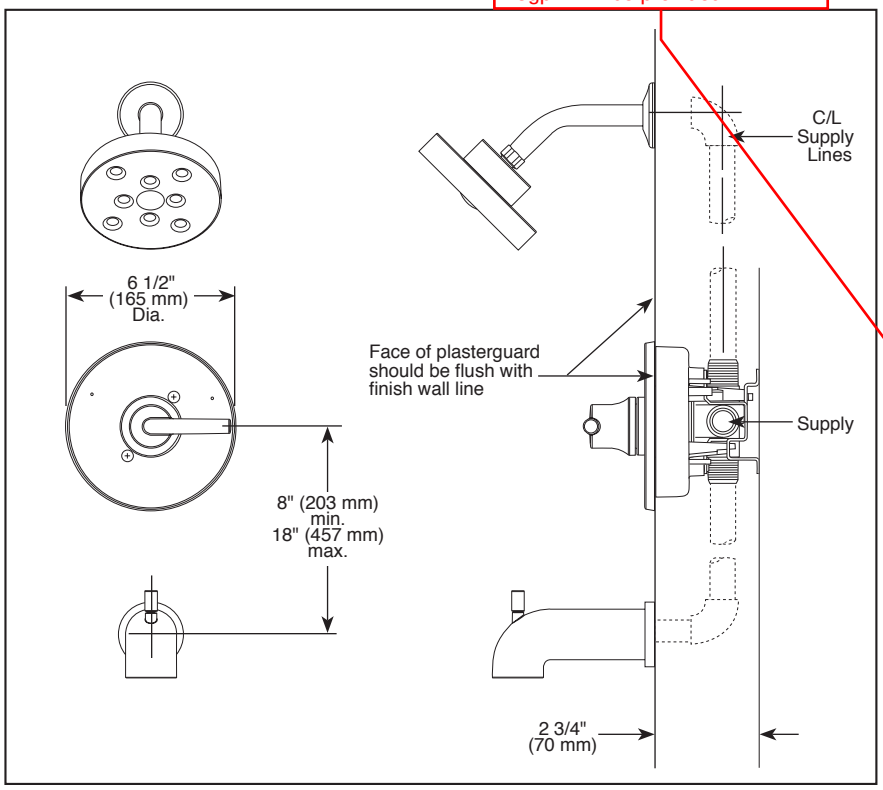


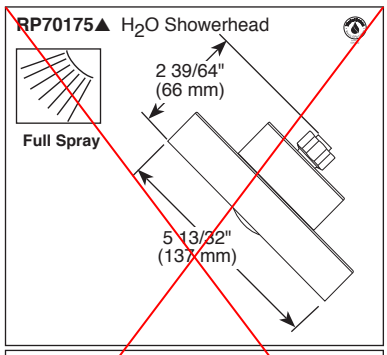


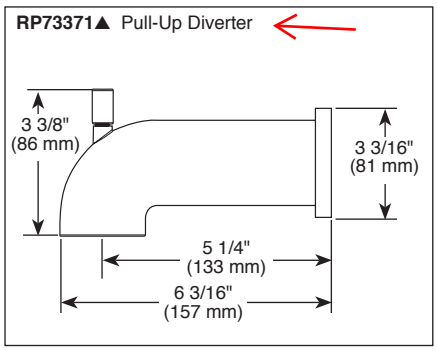


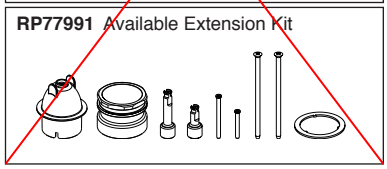


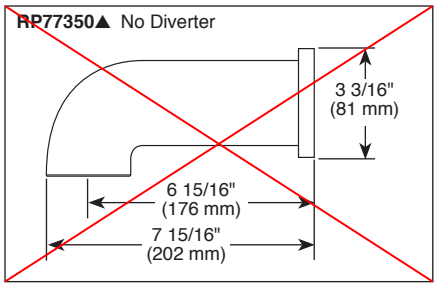


▲ Designate Proper Finish Suffix

# TUB AND SHOWER FAUCET TRIM

- Trinsic® Bath Collection
- Valve Only (T14059)
- Tub Only (T14159)
- Shower Only (T14259)
- Tub/Shower (T14459)

## FEATURES:

- Monitor® 14 Series pressure balanced single handle bath mixing valve trim
- Single function $H_2O$kinetic® Technology showerhead

## STANDARD SPECIFICATIONS:

- Maintains a balanced pressure of hot and cold water even when a valve is turned on or off elsewhere in the system
- For use with MultiChoice® Universal rough valve body (R10000 Series)
- Lever handle
- Temperature only controlled with handle
- Field adjustable means to limit handle rotation into hot water zone
- 120° maximum handle rotation
- ~~2.00 gpm @ 80 psi, 7.60 L/min @ 550 kPa~~
- Red/blue pad print temperature indicators on escutcheon
- "-LHD" models indicate less showerhead
- 1/2" CWT slip-on spout adapter
- Stem extension kit RP77991 can be ordered to allow for an additional 1 3/4" wall thickness. RP77991 ships with chrome escutcheon screws. For special finishes also order RP12630 escutcheon screws in desired finish.

## WARRANTY

- Lifetime limited warranty on parts (other than electronic parts and batteries) and finishes: or, for commercial users, for 5 years from date of purchase.
- 5 year limited warranty on electronic parts (other than batteries); or, for commercial users, for 1 year from the date of purchase. No warranty is provided on batteries.

## COMPLIES WITH:

- ASME A112.18.1 / CSA B125.1
- ASME 1016
- Indicates compliance to ICC/ANSI A117.1 - Valve control only
- EPA WaterSense®

Delta reserves the right (1) to make changes in specifications and materials, and (2) to change or discontinue models, both without notice or obligation. Dimensions are for reference only. See current full-line price book or www.deltafaucet.com for finish options and product availability.

DSP-B-T14059 Rev. H


DELTA FAUCET COMPANY

55 E. 111th Street, Indianapolis, Indiana 46280
350 South Edgeware Road, St. Thomas, ON N5P 4L1


© 2016 Masco Corporation of Indiana

TS-1 TYPE B BATHTUB-SHOWER COMBO

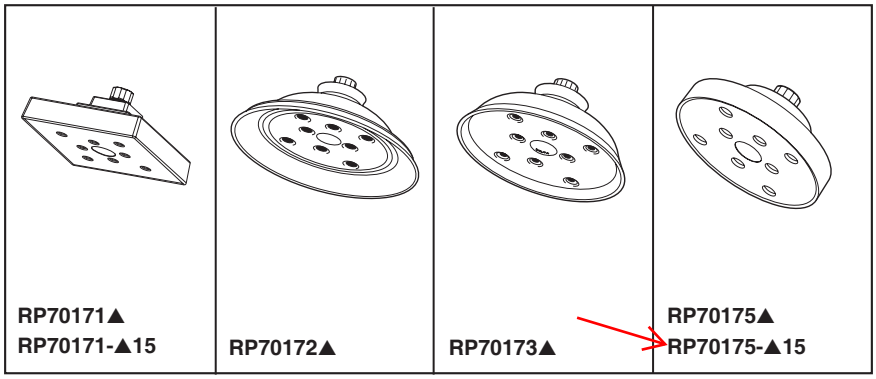


# WATER EFFICIENT SHOWERHEADS

■ $H_2O$kinetic Technology®

**Submitted Model No.:** _____

**Specific Features:** _____

**RP70171▲**
**RP70171-▲15**

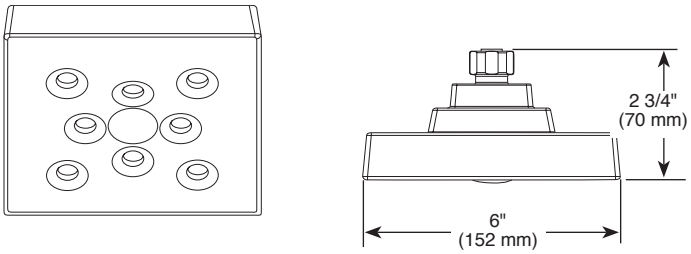


**RP70172▲**

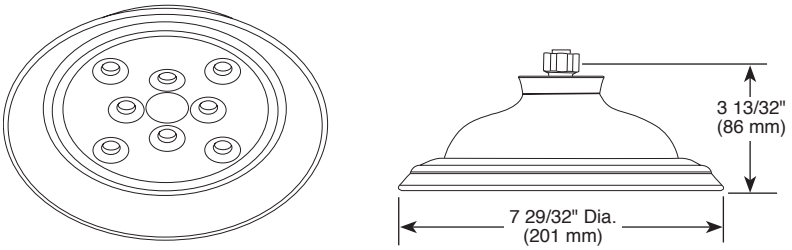


**RP70173▲**

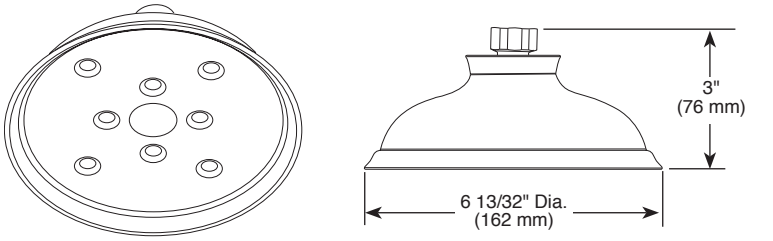


**RP70175▲**
**RP70175-▲15**

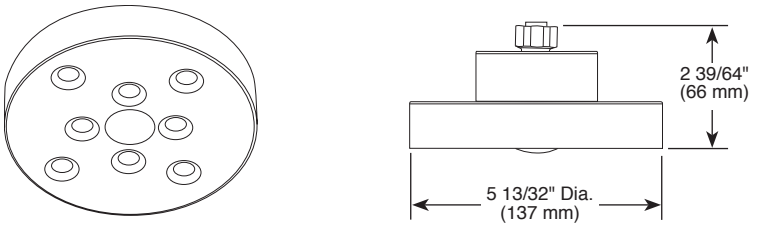


▲ Designate Proper Finish Suffix

Delta reserves the right (1) to make changes in specifications and materials, and (2) to change or discontinue models, both without notice or obligation. Dimensions are for reference only. See current full-line price book or www.deltafaucet.com for finish options and product availability.

DSP-B-RP70172 Rev. C

## STANDARD SPECIFICATIONS

- Full spray function.
- Standard 1/2" pipe itting.
- Maximum 2.0 gpm @ 80 psi, 7.6 L/min @ 550 kPa. (RP70171▲,RP70172▲,RP70173▲ & RP70175▲).
- Maximum 1.5 gpm @ 80 psi, 5.7 L/min @ 550 kPa. (RP70171-▲15 & RP70175-▲15 ).

## WARRANTY

- Lifetime limited warranty on parts (other than electronic parts and batteries) and finishes: or, for commercial users, for 5 years from date of purchase.
- 5 year limited warranty on electronic parts (other than batteries); or, for commercial users, for 1 year from the date of purchase. No warranty is provided on batteries.

**Spray Patterns**

**Full Spray**

## COMPLIES WITH:

- ASME A112.18.1 / CSA B125.1
- EPA WaterSense®


DELTA FAUCET COMPANY

55 E. 111th Street, Indianapolis, Indiana 46280
350 South Edgeware Road, St. Thomas, ON N5P 4L1


© 2015 Masco Corporation of Indiana

# TS-1 TYPE B BATHTUB-SHOWER COMBO

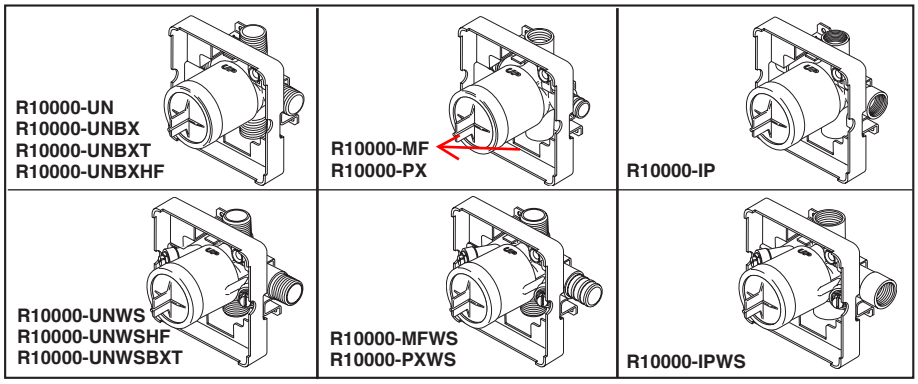


**Submitted Model No.:**_____

**Specific Features:**_____

**R10000-UN**
**R10000-UNBX**
**R10000-UNBXT**

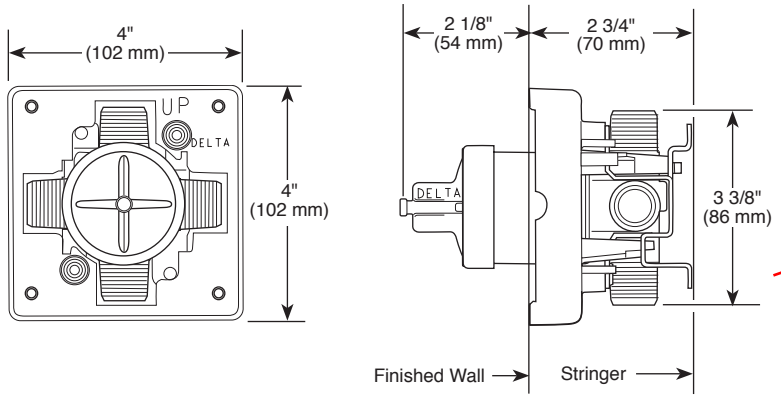


**R10000-UNWS**

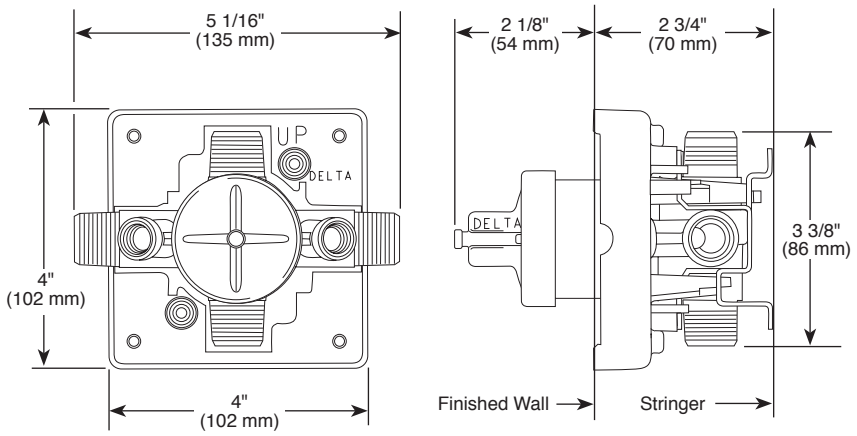


**RP75136** Available Extension Kit

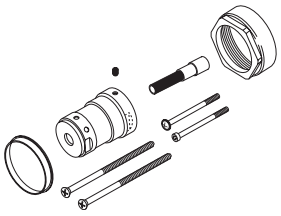

Delta reserves the right (1) to make changes in specifications and materials, and (2) to change or discontinue models, both without notice or obligation. Dimensions are for reference only. See current full-line price book or www.deltafaucet.com for finish options and product availability.

DSP-B-R10000 Rev. I

DELTA

# MULTICHOICE® UNIVERSAL ROUGH VALVE BODY

- R10000-UN (Universal Inlets/Outlets)
- R10000-UNBX (Universal Single Box Model)
- R10000-UNBXHF (High Flow Shower Only)
- R10000-UNBXT (Thin Wall)
- R10000-UNWS (Universal with Stops)
- R10000-UNWSHF (High Flow with Stops)
- R10000-UNWSBXT (Thin Wall with Stops)
- R10000-PX (Pex Crimp Connections with UN Outlets)
- R10000-PXWS (Pex Crimp Connections with Stop with UN Outlets)
- R10000-IP (IPS Inlets/Outlets)
- R10000-IPWS (IPS with Stops)
- R10000-MF (Pex Cold Expansion Connections with UN Outlets)
- R10000-MFWS (Pex Cold Expansion with Stops with UN Outlets)

## STANDARD SPECIFICATIONS:

- Forged brass body.
- Back-to-Back installation capabilities.
- Can be tested with air (200 PSI) or water (300 PSI) without valve using supplied test cap.
- Square plasterguard allows for right angle cuts.
- Thin wall mounting.
- For use with MultiChoice® Universal single or dual function trim. Cartridge ships with trim.
- 1/2" outlets and connections.

Note: No tub outlet in HF model.

Note: Should use proper fitting with each type (copper tubing, iron pipe, and pex fitting).

Note: Should use proper tooling with crimping pex fitting and cold expansion pex models.

Note: IP indicates female 1/2" threaded connections.

Note: UN indicates Universal type fitting and is 1/2" NPT male thread with 1/2" C.W.T. female sweat.

## WARRANTY

- Lifetime limited warranty on parts (other than electronic parts and batteries) and finishes: or, for commercial users, for 5 years from date of purchase.
- 5 year limited warranty on electronic parts (other than batteries); or, for commercial users, for 1 year from the date of purchase. No warranty is provided on batteries.

## COMPLIES WITH:

- ASME A112.18.1 / CSA B125.1

DELTA FAUCET COMPANY

55 E. 111th Street, Indianapolis, Indiana 46280
350 South Edgeware Road, St. Thomas, ON N5P 4L1
© 2015 Masco Corporation of Indiana

# TS-1 TYPE B BATHTUB-SHOWER COMBO

RAPID-FIT®

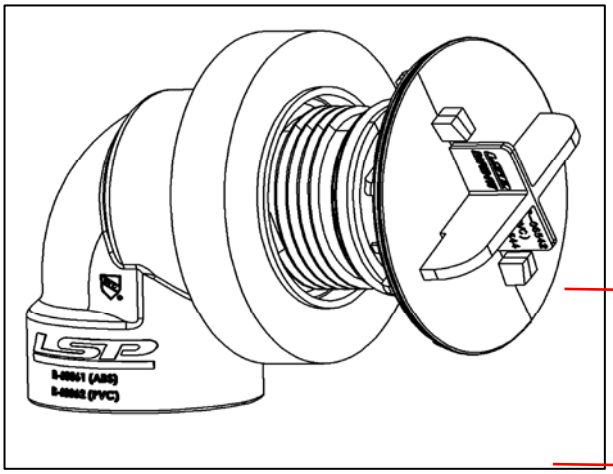

# REVOLVER™

**Specification Sheet**

## ROUGH-IN KITS

| NUMBER | DESCRIPTION |
|---|---|
| **HALF KITS - No piping or tee** | |
| R-6010-RK | Chrome, ABS Half kit |
| R-6011-RK | Chrome, PVC Half kit |
| **FULL KITS - Includes piping and tee** | |
| R-6110-RK | Chrome, ABS Full kit |
| R-6111-RK | Chrome, PVC Full kit |
| **TRIM KITS** | |
| R-0910 | Chrome, Lift & Turn Stopper & Faceplate |
| R-0916 | Chrome, Toe-Touch Stopper & Faceplate |
| R-0919 | Chrome, Push-Pull Stopper & Faceplate |

## COMPLETE KITS (with Trim kit)

| NUMBER | DESCRIPTION |
|---|---|
| **HALF KITS - No piping or tee** | |
| R-6010-LT | Chrome, ABS Half kit, Lift & Turn Stopper & Faceplate |
| R-6010-P | Chrome, ABS Half kit, Push-Pull Stopper & Faceplate |
| R-6010-T | Chrome, ABS Half kit, Toe-Touch Stopper & Faceplate |
| R-6011-LT | Chrome, PVC Half kit, Lift & Turn Stopper & Faceplate |
| R-6011-P | Chrome, PVC Half kit, Push-Pull Stopper & Faceplate |
| R-6011-T | Chrome, PVC Half kit, Toe-Touch Stopper & Faceplate |
| **FULL KITS - Includes piping and tee** | |
| R-6110-LT | Chrome, ABS Full kit, Lift & Turn Stopper & Faceplate |
| R-6110-P | Chrome, ABS Full kit, Push-Pull Stopper & Faceplate |
| R-6110-T | Chrome, ABS Full kit, Toe-Touch Stopper & Faceplate |
| R-6111-LT | Chrome, PVC Full kit, Lift & Turn Stopper & Faceplate |
| R-6111-P | Chrome, PVC Full kit, Push-Pull Stopper & Faceplate |
| R-6111-T | Chrome, PVC Full kit,Toe-Touch Stopper & Faceplate |

## *DESIGN FEATURES*

- Simplifies installation with only three parts required for a complete overflow assembly
- Single overflow assembly works with tubs from 1/8" to 7/16" thick
- Coarse thread allows for minimal turning to engage tub wall
- Low profile, snap-on faceplate
- Available in half kits and full kits; ABS and PVC
- Available in all major Designer Finishes

## *COMPLIANCES/LISTINGS*

- Test cap capable of four story testing (20psi) without blowing out and is easily removed after test
- IAPMO Listed
- Meets ASME STD A112.18.2

| Product Submittal | |
|---|---|
| Job Name | |
| Date | |
| Part Number | Quantity |
| | |
| | |
| | |
| | |
| Architect | |
| | |
| Contractor | |
| | |

LSP PRODUCTS GROUP

3689 Arrowhead Drive, Carson City, NV 89706

Phone (800) 854-3215 Fax (800) 243-1777

E-mail sales@lspproducts.com Website www.lspproducts.com

Content matter is subject to change at any time. It is the user's responsibility to ensure the most updated revisions are obtained.

RF/S-2010 (01-09)

TS-1 TYPE B BATHTUB-SHOWER COMBO

RAPID-FIT®

# BATH WASTE ASSEMBLIES
## SPECIFICATION SHEET

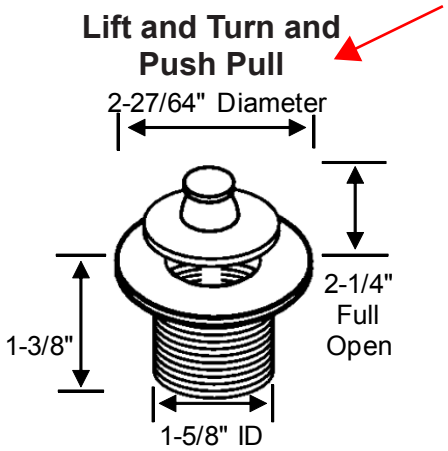


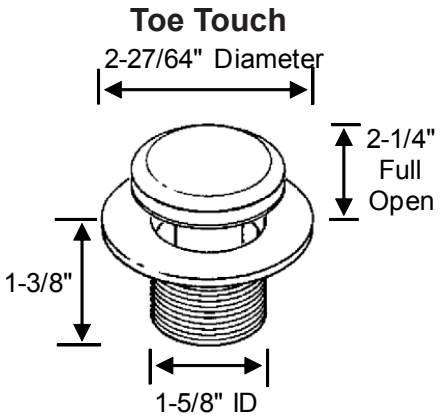


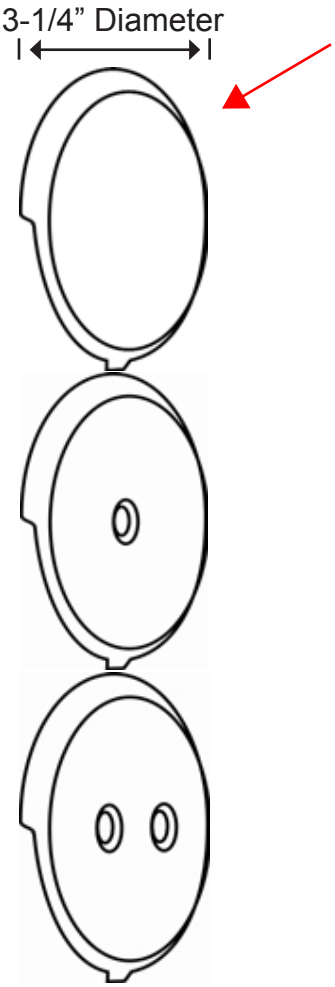


## SPECIFICATION

Furnish and install bath waste and overflow assembly as manufactured by LSP Products Group. Available for ABS or PVC Schedule 40.

## DESIGN FEATURES

- Overflow elbow has a slight angle to accomodate tub angle
- Available with no hole (Revolver), one hole, and two hole cover plate
- Assemblies come with chrome plated drains and overflow plates
- Available in Lift and Turn, Push Pull, or Toe touch drains.
- Available with our without testing feature
- Full kits include pipe and tee, half kits do not have the pipe and tee included

Full Kit
With Test

Half Kit
No Test

LSP® PRODUCTS GROUP

3689 Arrowhead Drive, Carson City, NV 89706

Phone (800) 854-3215 Fax (800) 243-1777

E-mail sales@lspproducts.com Website www.lspproducts.com

Content matter is subject to change at any time. It is the user's responsibility to ensure the most updated revisions are obtained.

RF/BA (04-11) Rev 1